Circular bends

AL-60°

Description

Circular segmented and lockseamed bends are used to install a ventilation system in buildings along with spiral or smooth ducts. The products can be made of: galvanized steel sheet - corrosion class C3-L / C2-M; sheet with aluminium zinc coating - corrosion class C4-M / C3-H; stainless steel sheet AISI 304 (1.4301) or AISI 316L (1.4404) - corrosion class C5. Bends is made with double seal gasket EPDM with self-slip material inside. Tightness class C according to LST EN 1506 and LST EN 12237. The bends can be used at temperatures from -45 to +85 °C with appropriate insulation. The maximum permissible absolute humidity inside the air stream and outside is 18 g/kg. Bends can be manufactured in 90 °, 60 °, 45 °, 30 °, 15 ° angle modifications.

Ordering code

..... AL200-60

- Galvanized steel - AISI 304 – NP AISI 316L – 316NP
- Product
- Size
- Angle

Sample: NPAL200-60 – made of AISI 304 steel, circular bend, diameter 200 mm, angle 60°.

Dimensions

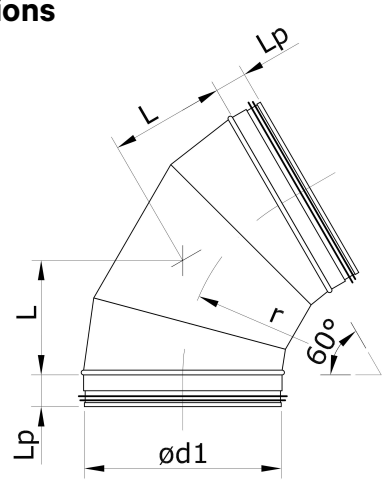

r=d1

Ød1$_{nom}$ [mm]	L [mm]	s [mm]	Lp [mm]	Mass [kg]	s_{np} [mm]	Mass$_{np}$ [kg]
200	115	0,5	40	1,0	0,5	1,01
250	144	0,5	40	1,36	0,5	1,37
315	182	0,5	40	1,98	0,5	2,00
355	205	0,5	50	2,50	0,5	2,61
400	231	0,5	50	3,05	0,5	3,17
450	260	0,5	50	3,73	0,5	3,86
500	289	0,5	50	4,46	0,5	4,61
560	323	0,5	50	5,43	0,5	5,60
630	354	0,6	50	8,02	0,5	6.87
710	410	0,7	65	11,8	0,6	10,2
800	462	0,7	65	14,6	0,6	12,6
900	520	0,7	100	19,0	0,6	16,4
1000	577	0,9	100	29,4	0,8	26,3
1250	722	0,9	100	44,1	0,8	39,4

Mass$_{np}$ – product mass made of stainless steel
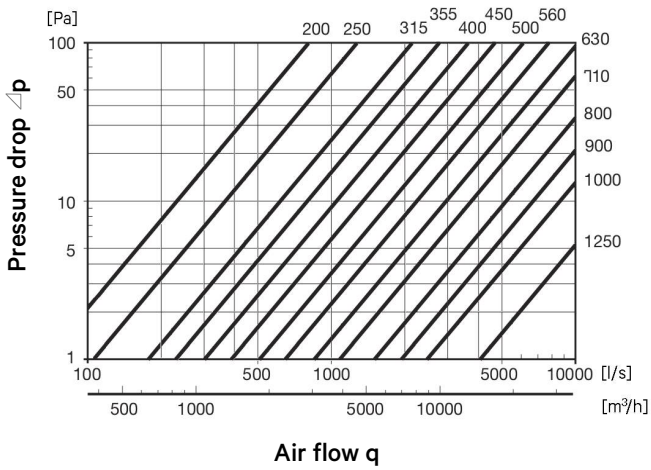
Technical data